50 Years of Synergy
Endless Possibilities

KF-D Series

KF4300D | KF5200D | KF6000D

WIA Machine Tools Column Moving Type Vertical Machining Center

WIA MACHINE TOOLS

Technical Leader

Column Moving Type Vertical Machining Center with High-speed and large work space

The Vertical Machining Center KF-D Series designed by WIA machine tools with years of expertise and the latest technology, is a column moving type machining center equipped with Dual Table to maximize productivity.

		KF4300D	KF5200D	KF6000D
Table Size (L×W)	mm(in)	2-660×480 (2-26″×18.9″)	2-860×570 (2-33.9″×22.4″)	2-930×650 (2-36.6″×25.6″)
Max. Load Capacity	kg(lb)	2-300 (2-661)	2-350 (2-772)	2-500 (2-1,102)
Spindle Taper	-	BBT40 [HSK-A63]		
Spindle Speed	r/min	8,000 [8,000 : High Torque] [12,000] [15,000]		
Sp. Power (Max./Cont.)	kW(HP)	18.5/15 (25/20) [15/11 (20/15)] [18.5/11 (25/15)] [18.5/11 (25/15)]		
No. of Tools	EA	42 : Pick-up Type		45 : Pick-up Type
Travel (X/Y/Z)	mm(in)	560/430/570 (22.1″/20.5″/22.4″)	760/520/570 (29.5″/20.5″/22.4″)	830/600/635 (32.7″/23.6″/25″)
Rapid Traverse Rate	m/min	42/42/42		

[ ] : Option

KF-D Series

Dual Table & Column Moving Type Vertical Machining Center

- Dual Tables for enhanced productivity
- High-precision machining by improved spindle quality (Max. 15,000 rpm direct spindle)
- High-speed roller type LM guide in all axis (Rapid Traverse Rate : 42 m/min)
- 42 Tool pickup type magazine application that does not require automatic tool loading device (KF6000D : 45 Tool)
- Improved user convenience by applying the latest controller of FANUC

(KF6000D : Auto-door design)

01 BASIC **STRUCTURE**

High Speed & Productivity Column Moving Type Vertical Machining Center

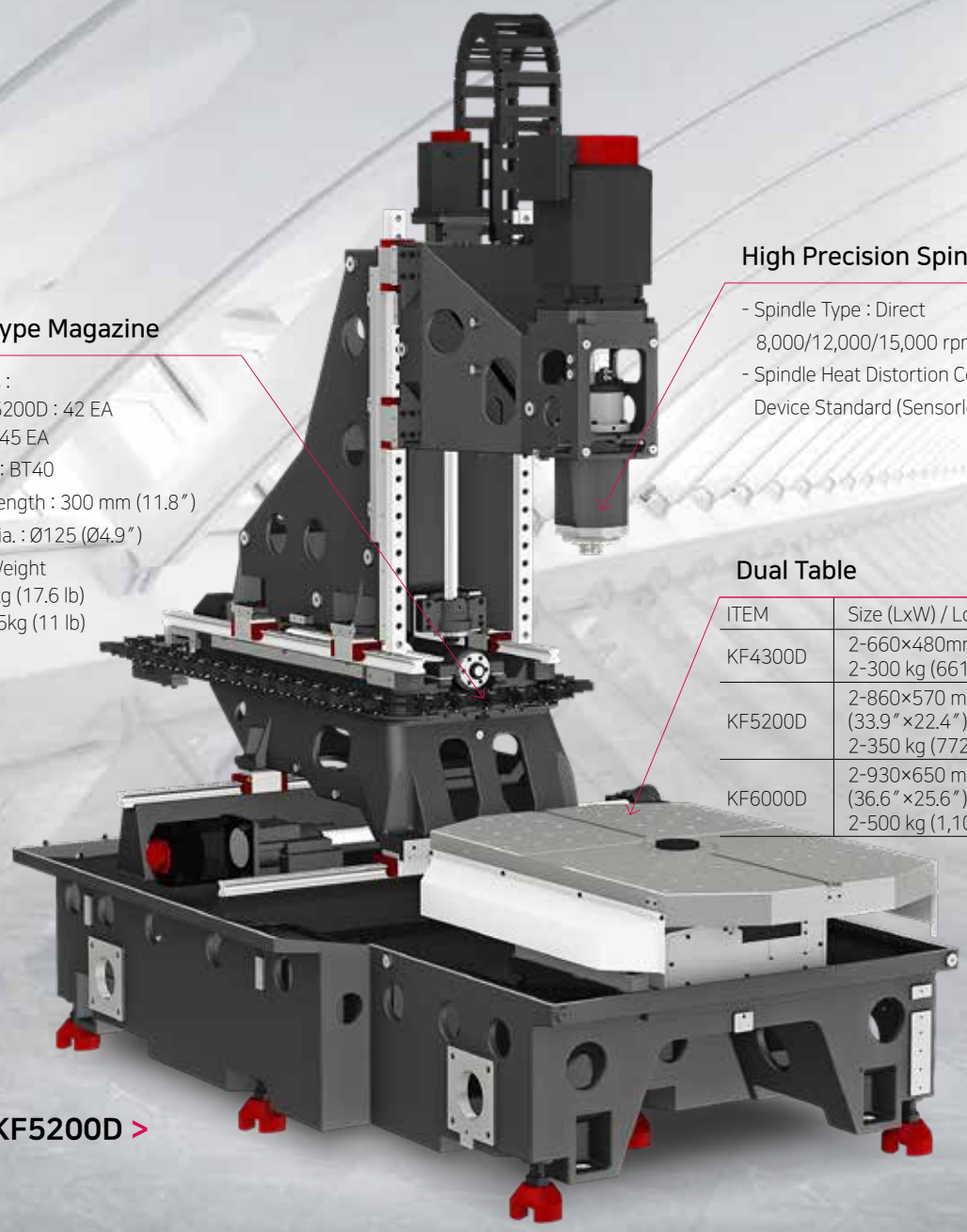

Pick-up Type Magazine

- No. of Tools :
  KF4300D/5200D : 42 EA
  KF6000D : 45 EA
- Tool Shank : BT40
- Max. Tool Length : 300 mm (11.8″)
- Max. Tool Dia. : Ø125 (Ø4.9″)
- Max. Tool Weight
  BBT 40 : 8kg (17.6 lb)
  HSK-A63 : 5kg (11 lb)

High Precision Spindle

- Spindle Type : Direct
  8,000/12,000/15,000 rpm
- Spindle Heat Distortion Compensation Device Standard (Sensorless)

Dual Table

ITEM	Size (LxW) / Load Capa.
KF4300D	2-660×480mm (26″×18.9″) 2-300 kg (661 lb)
KF5200D	2-860×570 mm (33.9″×22.4″) 2-350 kg (772 lb)
KF6000D	2-930×650 mm (36.6″×25.6″) 2-500 kg (1,102 lb)

KF5200D >

HIGH-PRECISION, SPEED & LARGE WORKING AREA

HIGH-PRECISION STRUCTURE

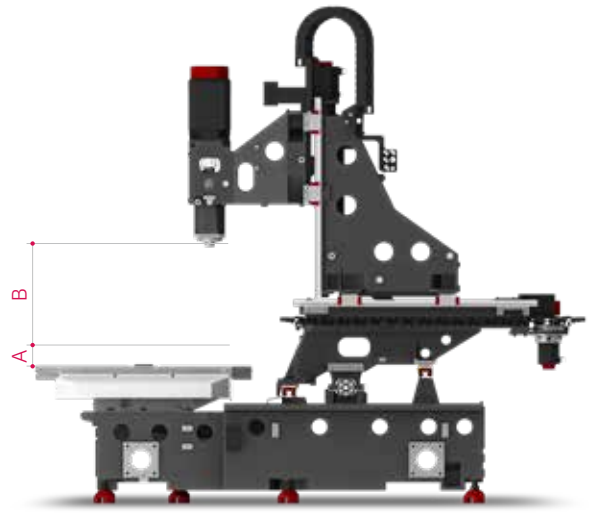

Optimal Structural Analysis

KF-D series is designed to have optimal structure through WIA machine tools's unique structural analysis. In particular, enhancement of bed and column's rigidity makes excellent performance even in heavy duty cutting.

Moving Column

The KF-D Series is designed with a moving column in order to maximize productivity of the incorporated Dual Table. In addition, due to the enlargement of the column's width and symmetrical heat behavior column structure, heat displacement is minimized and machining accuracy is increased.

Z-axis	A (Distance from Table Top to SP. Nose) : **200** mm (7.9″) B (Stroke) : **570** mm (22.4″)

Minimized Heat Displacement

To prevent heat displacement of the bed from high temperature coolant, coolant leakage prevention bed cover is applied. This can provide stable machining precision even during long working hours.

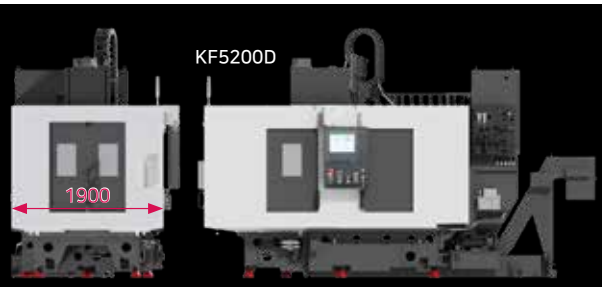

Optimal Structure For Line Automation

- Machine width 1.9m Decreased by 21%
- Rear chip disposal available (Prior model unavailable)

02 HIGH-SPEED FEED

Highest Quality, High-speed Vertical Machining Center

REDUCED NON-CUTTING TIME & IMPROVED FEED PRECISION

GUIDE WAY

High-Speed Roller LM Guideway

By applying an roller LM guide structure with high speed and rigidity, a rapid traverse rate of **42m/min** is achieved based on the all axes.

Ball Screw

The pretensioned ball screw minimizes the expansion and contraction according to the heat and further reinforces the rigidity by the double anchor support method.

< X-axis : **4 Row bearing**

⦿ Improved rapid traverse speed

Previous Machine	X-axis	40 m/min	
KF5200D	X-axis	**42** m/min	5% Improvement
Previous Machine	Y-axis	40 m/min	
KF5200D	Y-axis	**42** m/min	5% Improvement
Previous Machine	Z-axis	30 m/min	
KF5200D	Z-axis	**42** m/min	40% Improvement

Travel (X/Y/Z)	**Rapid Traverse Rate** (X/Y/Z)
KF4300D	KF4300D
560/430/570 mm (22.1″/20.5″/22.4″)	42/42/42 m/min (1,654″/1,654″/1,654″)
KF5200D	KF5200D
760/520/570 mm (29.5″/20.5″/22.4″)	42/42/42 m/min (1,654″/1,654″/1,654″)
KF6000D	KF6000D
830/600/635 mm (32.7″/23.6″/25″)	42/42/42 m/min (1,654″/1,654″/1,654″)

03 HIGH PRECISION **SPINDLE**

Excellent machining performance with high-precision spindle

Spindle Specifications

[ ] : Option

Speed r/min	Motor (Max./Cont.)	Torque (Max./Cont.)	Type	Tool Shank
8,000 rpm	**18.5/15** kW (25/20 HP)	**118/95.5** N·m (87/70.4 lbf·ft)	Direct	BBT40 [HSK-A63]
[**8,000** rpm (High-torque)]	[**15/11** kW (20/15 HP)]	[**286/143** N·m (210.9/105.5 lbf·ft)]		
[**12,000** rpm]	[**18.5/11** kW (25/15 HP)]	[**118/52.5** N·m (87/38.7 lbf·ft)]		
[**15,000** rpm]	[**18.5/11** kW (25/15 HP)]	[**118/52.5** N·m (87/38.7 lbf·ft)]		

HIGH-PERFORMANCE, HIGH-PRECISION SPINDLE

SPINDLE

Direct Type Spindle

The spindle motor is directly connected to the main spindle by a high speed and high precision coupling. Rapid spindle acc/deceleration is performed without backlash. The coupling also minimizes vibration and heat transfer from the motor preventing thermal displacement.

Spindle Cooling OPTION

The spindle cooling system minimizes thermal displacement which can happen during lengthy machining operations, and offers continued accuracy based on the thermal stability.

Improved cooling capability with chilling through head frame

Through Spindle Coolant (20/30/70 bar) OPTION

Through Spindle Coolant is exceedingly useful when drilling deep holes. It helps increase the lifetime of the tool, while decreasing cycle time.

Prevents oil leakage by applying high-quality rotary joints

Dual Contact Spindle

The Big Plus spindle system (BBT40) provides dual contact between the spindle face and the flange face of the tool holder.

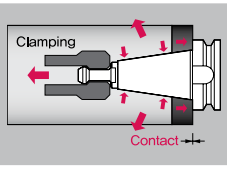

⦿ Increased Maximum Cutting Capacity

Previous Machine	SM45C	368 cc/min
KF5200D	SM45C	**535** cc/min

45% Improvement

HSK TOOL HOLDER

OPTION

HSK tool holder is untilized for precise positioning with less expansion in the spindle taper during high speed rotation. This ensures an excellent level of precision for die mold machining.

HSK Tool

04 ATC & TABLE

High Productivity Achieved with High Rigidity, Accuracy Machining

ATC Specifications

[ ] : Option

Model	No. of Tools	Max. Tool Length	Max. Tool Dia. (W.T/W.O)	Tool Shank	Driving Method
KF4300D KF5200D	42 EA	Ø50 : 300 mm (11.8″) Ø125 : 170 mm (6.7″)	Ø80/125 mm (Ø3.1″/Ø4.9″)	BBT40 [HSK-A63]	Pick-up Type
KF6000D	45 EA				

HIGH RIGIDITY, TOOL CHANGE SYSTEM

ATC & MAGAZINE

Pick-up Type Magazine

Automatic tool loading device with unnecessary pick-up type magazine has excellent maintainability.

Chip disposal is enhanced by making the disposal direction going under the tools.

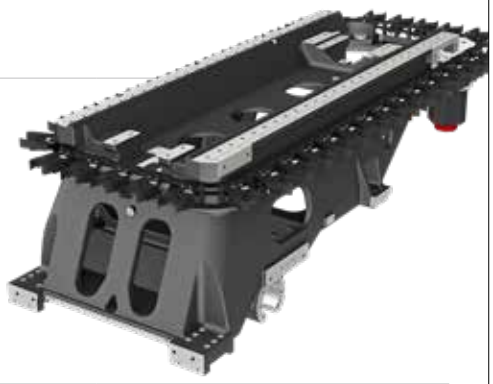

Tool Change Time (C-C)

KF4300D : 4.6 sec | KF5200D : 4.7 sec | KF6000D : 4.8 sec

TABLE

Dual Table

High productivity is achieved by the dual table which enables workers to setup a new workpiece while the machine is processing. Especially, the rotary table is designed for the simpler positioning by the location pin due to the application of hydraulic methods.

Previous Machine	Change Time	6 sec
KF4300D	Change Time	**5** sec

1 sec Reduction

Previous Machine	Table Size	2-700×500 mm
KF5200D	Table Size	**2-860×570** mm

40% Improvement

Model	Table Size (L×W)	Max. Load Capacity	Change Time
KF4300D	2-660×480 mm (26″×18.9″)	2-300 kg (2-661 lb)	5 sec
KF5200D	2-860×570 mm (33.9″×22.4″)	2-350 kg (2-772 lb)	5.5 sec
KF6000D	2-930×650 mm (36.6″×25.6″)	2-500 kg (2-1,102 lb)	8.3 sec

05 USER CONVENIENCE

Various Devices for User Friendly

CHIP DISPOSAL SOLUTION & COOLANT UNIT

1. Upper part of machining area sealed to prevent chip leakage.
2. Installation taps for oil mist collector & gantry loader applied.
3. Convenient layout with rear disposal chip conveyor design.

High Flexibility in Fixture Installation

Rotary valve for fixture under the table and maintenance space secured
Route for fixture rotary valve hose & wire secured on top of the table
Taps on all sides of the bed for fixture clamp valve installation (No.2, 4)

Std. Coolant (Spindle Nozzle)

Shower Coolant (Opt.)

Gun Coolant (Opt.)

Air Gun (Opt.)

Upper-type Conveyor (Std.)

The upper type chip conveyor is applied as a standard to efficiently remove chips generated during machining. In addition, the 415 liter of large coolant tank provides a seamless machining environment even with large amounts of coolant.

Hinge	Chip Type : Roughing Chip, Long Chip, Chip complex	Material : SS41, SM45C, Cast Steel	Rear Direction
	Highly efficient when disposing a lot of chips. Capable of handling stringy chips..		
Scraper	Chip Type : Finely broken chip blown out	Material : cast Iron, Nonferrous	
	Convenient for shortly cut chips.		
※ Screw	Chip Type : The lower portion of micro-chips	Material : Steel, Casting	
	Compresses and ejects chips to reduce chip Trouble.		
※ Drum Filter	Chip Type : Powder, Micro Chip	Material : AL	
	Advantageous in precision, as the chips do not flow in to the coolant nozzle.		

※ When ordering a screw or drum filter chip conveyor, prior consult with hyudai wia's sales person.

CONVENIENT WORK LOADING

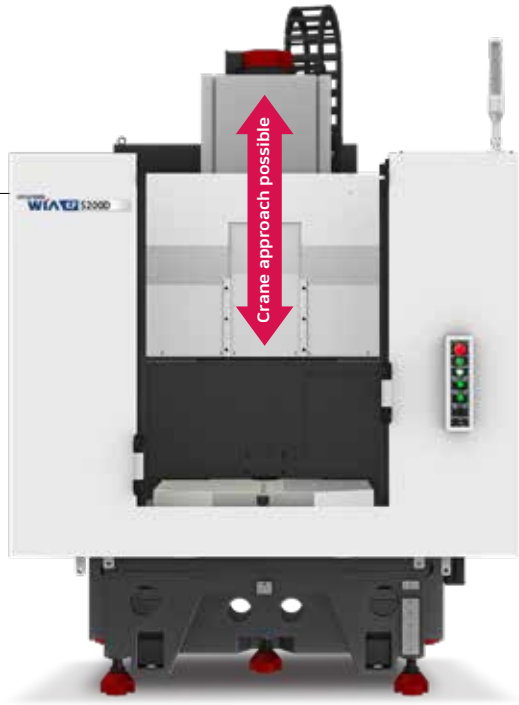

Top Cover Open When Door Open

Crane can approach the table when the door is open through the upper side, which allows superior workpiece loading access and maintainability.

PRECISION SYSTEM

Linear Scale

Linear scales increase positioning accuracy and reduce distortion caused by thermal growth, thus ensuring a more accurate finished part

Touch Sensor

Workpiece coordinate values can be set automatically using the optional spindle probe.

TLM (Laser & Touch)

Tool lengths and diameters can be set automatically using the optional tool setter. This can also be used to monitor attrition and detect broken tools.

NC ROTRY TABLE & HYDRAULIC SUPPLY UNIT

Various shapes of products can be processed when using NC Rotary Table. In addition, 100 bar of high pressure hydraulic unit for the fixture increases the tightening power of the teeth.

06 FANUC - SMART PLUS

The Compatible All-round Control

15″ Touch-type Monitor as a standard

Smart Machine Control	Fast Cycle Time Technology
	Fine Surface Technology
Conversational Program	Smart Guide-i
i-HMI	Machining-aid Function
AI Contour Control	AICC-2 (200 blocks)
Smooth Tolerance Control	0.1μm command and specify tolerance
JERK Control	Diminished vibration by controlling acceleration speed
Machining Condition Selection	Designated machining level based on speed & quality
Machining Quality Control Function	Smooth Tolerance+ integrated support
Part Program Storage	5120M (2MB)
No. of Registerable Programs	1000 EA

8Ch. Thermal displacement compensation OPTION

Control Software

Thermal Sensor

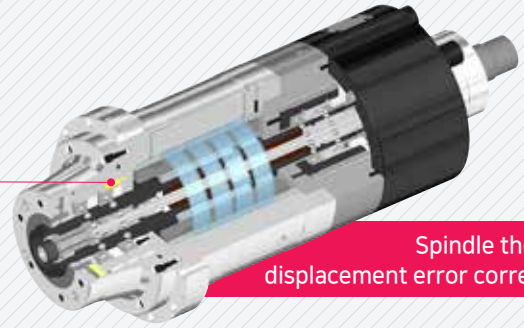

Spindle thermal displacement error correction

Thermal Sensor

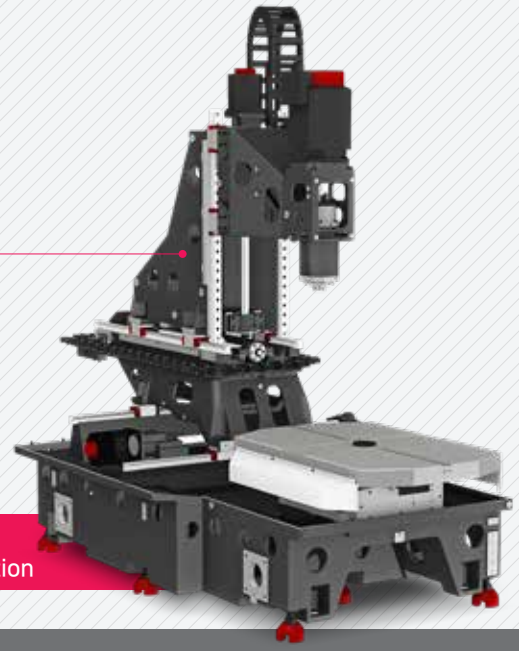

Structure thermal displacement error correction

Machine tools generate thermal displacement due to heat during machining.
WIA machine tools detect thermal changes through thermal sensors installed on the main thermal sources of the machine.
In addition, a thermal displacement compensation device that predicts the amount of thermal displacement according to the amount of thermal change and provides a command to the motor with a compensated value to maintain consistent precision is provided as an option.

SMART CNC (FANUC Smart Plus)

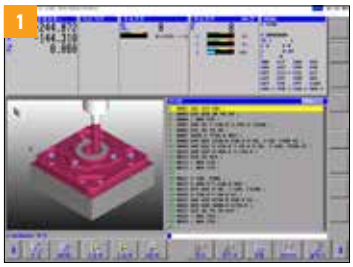

1. Dialogue Program (Smart Guide-i)
This software offers the maximum user convenience through dialogue manipulation from setup to processing. This includes writing processing programs and simulation checks.

2. LAUNCHER
This software offers shortcuts for quick access to specialized features and frequently used features.

SPECIFICATIONS

Standard & Optional

● : Standard ○ : Option ☆ : Prior Consultation - : Non Applicable

Spindle		KF4300D	KF5200D	KF6000D
8,000rpm (18.5kW)	Direct	●	●	●
8,000rpm (15kW)	Direct (High Torque)	○	○	○
12,000rpm (18.5kW)	Direct	○	○	○
15,000rpm (18.5kW)	Direct	○	○	○
Spindle Cooling System	8,000rpm	○	○	○
	12,000/15,000rpm	●	●	●
ATC				
ATC Extension	42	●	●	-
	45	-	-	●
ATC Type	Pick-up	●	●	●
Tool Shank Type	BBT40-8kg (17.6 lb)	●	●	●
	HSK-A63-5kg (11 lb)	○	○	○
U-Center	D'andrea	-	-	-
Pull Stud	45°	●	●	●
Table & Column				
APC	Rotary Turn	●	●	●
Tap Type Table	mm Type	●	●	●
	inch Type	○	○	○
T-Slot Table		○	○	○
NCRotary Table		☆	☆	☆
Coolant System				
Std. Coolant (Main Spindle Nozzle)		●	●	●
* Through Spindle Coolant	20bar	○	○	○
	30bar	○	○	○
	70bar	○	○	○
Top Cover (Machining Room Upper)		●	●	●
Shower Coolant		○	○	○
Gun Coolant		○	○	○
Air Gun		○	○	○
Cutting Air Blow		○	○	○
Tool Measuring Air Blow (Only for TLM)		○	○	○
Air Blow for Automation		☆	☆	☆
Thru MQL Device (Without MQL)		☆	☆	☆
Coolant Chiller (Sub Tank)		☆	☆	☆
Power Coolant System (For Automation)		☆	☆	☆
Chip Disposal				
Coolant Tank	415 ℓ (109.6 gal)	●	●	●
Chip Conveyor (Hinge/Scraper)	Rear(Rear)	○	○	○
	Right(Rear)	○	○	○
*1) Short Type Chip Conveyor (HingeMicro-volume chips/Screw) +Coolant Tank+Shower Coolant	Rear(Rear)	☆	☆	☆
Special Chip Conveyor (Drum Filter)		☆	☆	☆
Chip Wagon	Standard (180 ℓ [47.5 gal])	○	○	○
	Swing (200 ℓ [52.8 gal])	○	○	○
	Large Swing (290 ℓ [76.6 gal])	○	○	○
	Large Size (330 ℓ [87.2 gal])	○	○	○
	Customized	☆	☆	☆
S/W				
Dialogue Program (HW-DPRO)		○	○	○
DNC software (HW-eDNC)		○	○	○
Smart Guide-i : FANUC		●	●	●
Smart S/W		☆	☆	☆

Electric Device		KF4300D	KF5200D	KF6000D
Call Light	1 Color : ■	●	●	●
Call Light & Buzzer	3 Color : ■■■B	○	○	○
Electric Cabinet Light		○	○	○
Remote MPG		●	●	●
3 Axis MPG		○	○	○
Work Counter	Digital	○	○	○
Total Counter	Digital	○	○	○
Tool Counter	Digital	○	○	○
Multi Tool Counter	Digital	☆	☆	☆
Electric Circuit Breaker		○	○	○
Transformer	40kVA	○	○	○
Auto Power Off		○	○	○
Back up Module for Black out		○	○	○
Measuring Device				
Air Zero	TACO	☆	☆	☆
	SMC	☆	☆	☆
Work Measuring Device		○	○	○
TLM (Marposs/Renishaw/Blum)	Touch	○	○	○
	Laser	○	○	○
*2) Tool Broken Detective Device	Touch : Marposs / Renishaw	☆	☆	☆
	Swing Touch : SCHUBERT BK Mikro9	☆	☆	☆
Linear Scale	X/Y/Z Axis	○	○	○
Coolant Level Sensor (Only for Chip Conveyor, Bladder Type)		☆	☆	☆
Environment				
Air Conditioner		○	○	○
Oil Mist Collector		☆	☆	☆
Oil Skimmer (Only for Chip Conveyor)		○	○	○
MQL (Minimal Quantity Lubrication)		☆	☆	☆
Fixture & Automation				
Auto Door		○	○	○
Sub O/P		☆	☆	☆
NC Rotary Tablel/F	Single	☆	☆	☆
	Channel	☆	☆	☆
Control of Additional Axis	1Axis	☆	☆	☆
	2Axis	☆	☆	☆
External M Code 4ea		○	○	○
Automation Interface		☆	☆	☆
I/O Extension (In & Out)	16 Contact	☆	☆	☆
	32 Contact	☆	☆	☆
Hyd. Device				
Std. Hyd. Unit	45bar/50 ℓ [13.2 gal]	○	○	○
*3) Center Hyd. Supply Device	2x3 (6 Port)	○	○	○
	2x5 (10 Port)	○	○	○
	Simple 2×6 (150 bar 8 Ports + Air 4 Ports)	☆	☆	☆
	TOP HOSE ROTARY GUIDE	☆	☆	☆
ETC				
Tool Box		●	●	●
Customized Color	Need for Munsel No.	☆	☆	☆
CAD&CAM Software		☆	☆	☆
Thermal displacement compensation		○	○	○

*1 : Short type - Bed level raised by 20mm (0.8")
*2 : Magazine cover is modified to mount the BK9.
*3 : This incurs a restriction that reduces the Y-axis stroke.
*Through Spindle Coolant : Please check the filter types with sales representative.
Specifications are subject to change without notice for improvement.

Spindle Output/Torque Diagram

8,000r/min, Direct

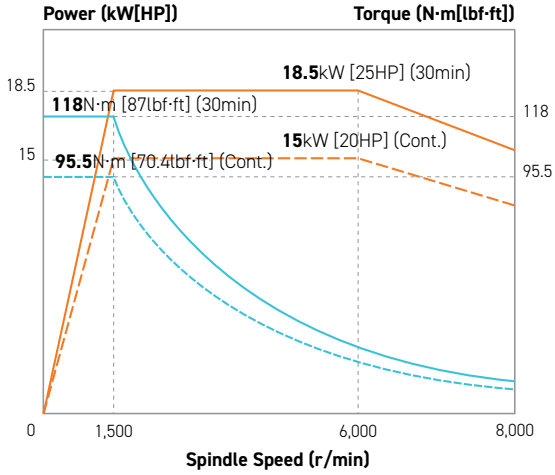

8,000r/min, Direct (High Torque)

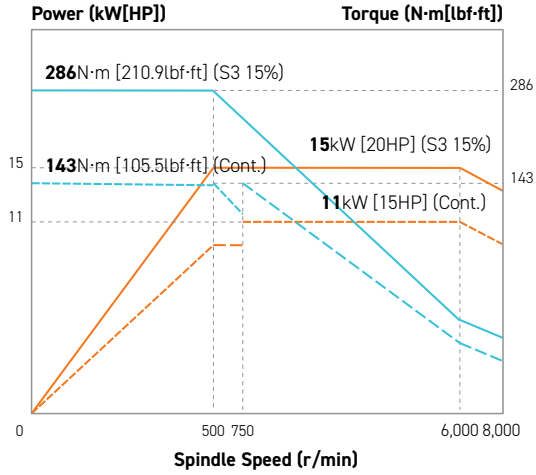

12,000r/min, Direct

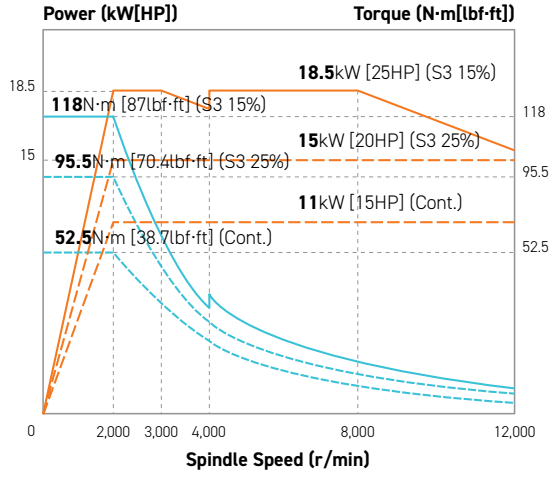

15,000r/min, Direct

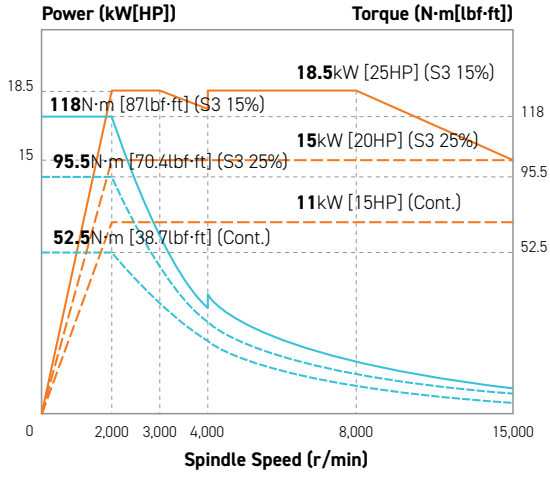

SPECIFICATIONS

External Dimensions (KF4300D _ Standard)

unit : mm(in)

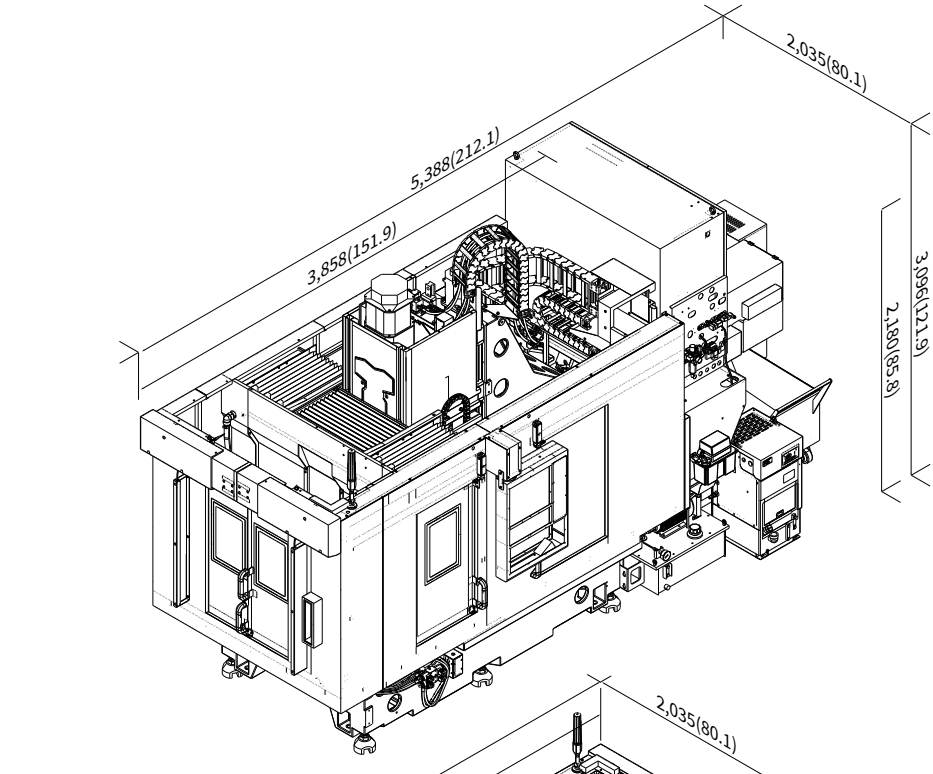

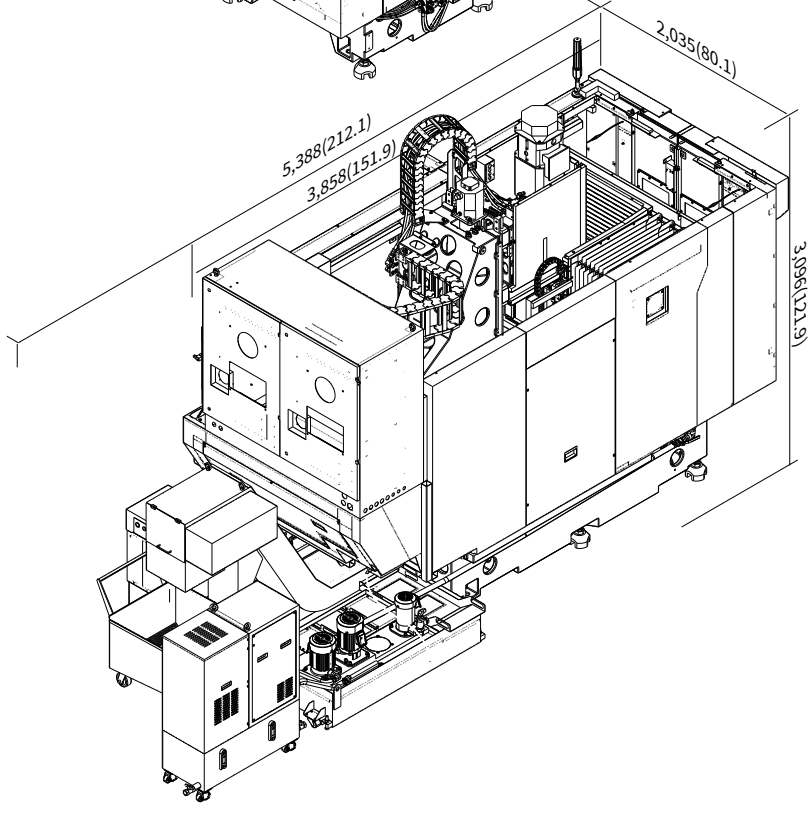

External Dimensions (KF4300D _ Short Type)

unit : mm(in)

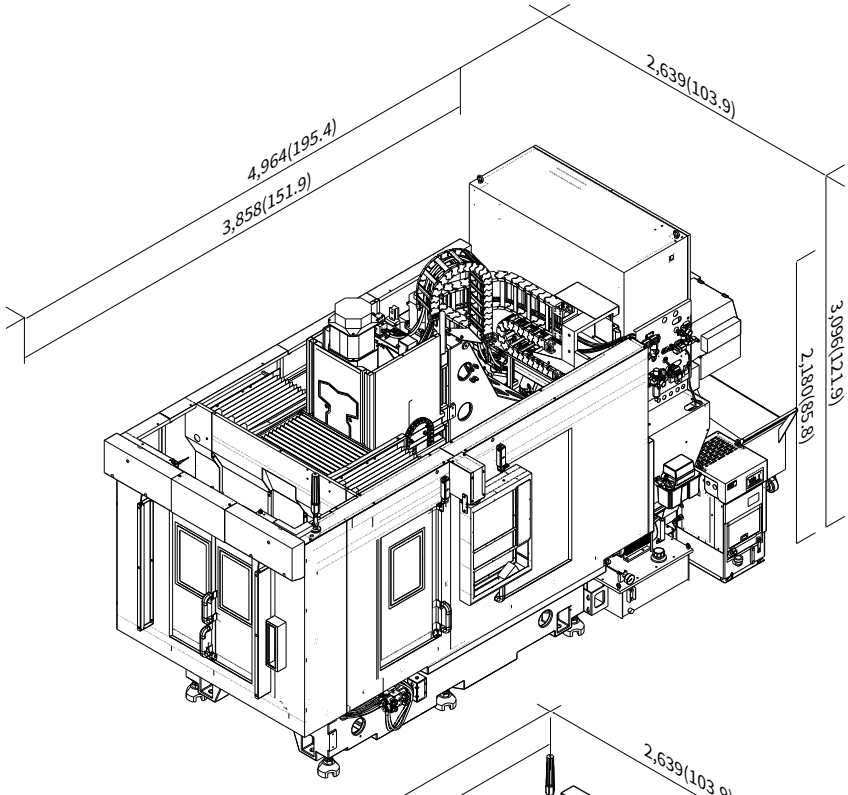

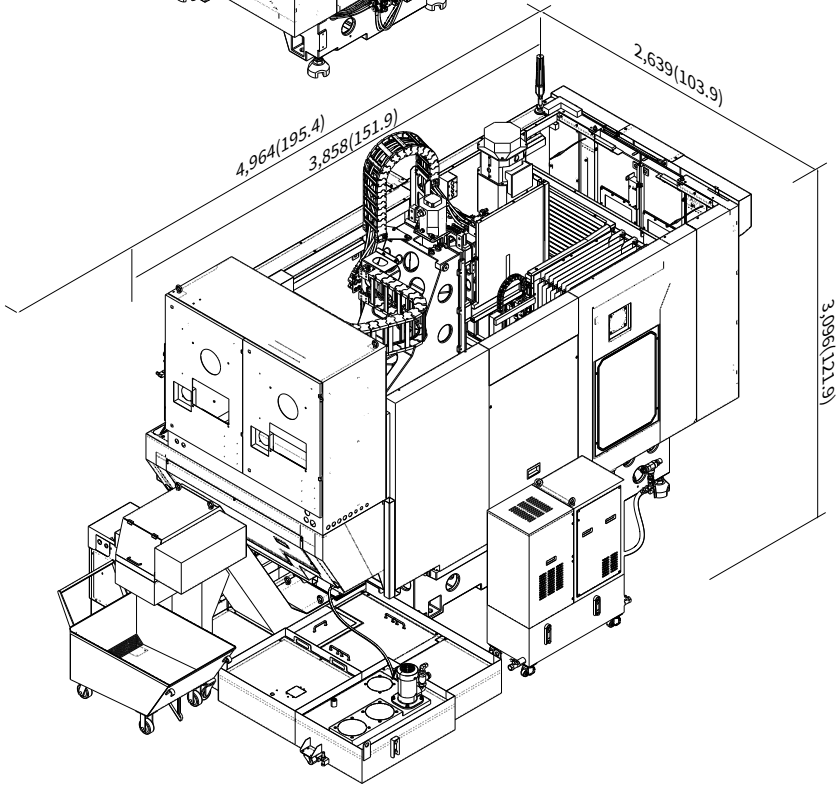

SPECIFICATIONS

External Dimensions (KF4300D _ Side rear type)

unit : mm(in)

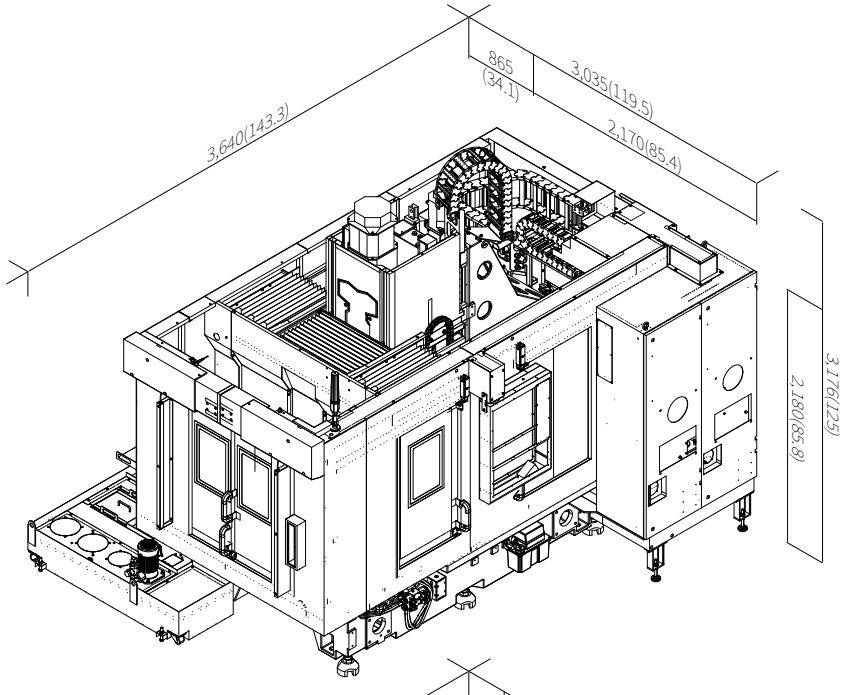

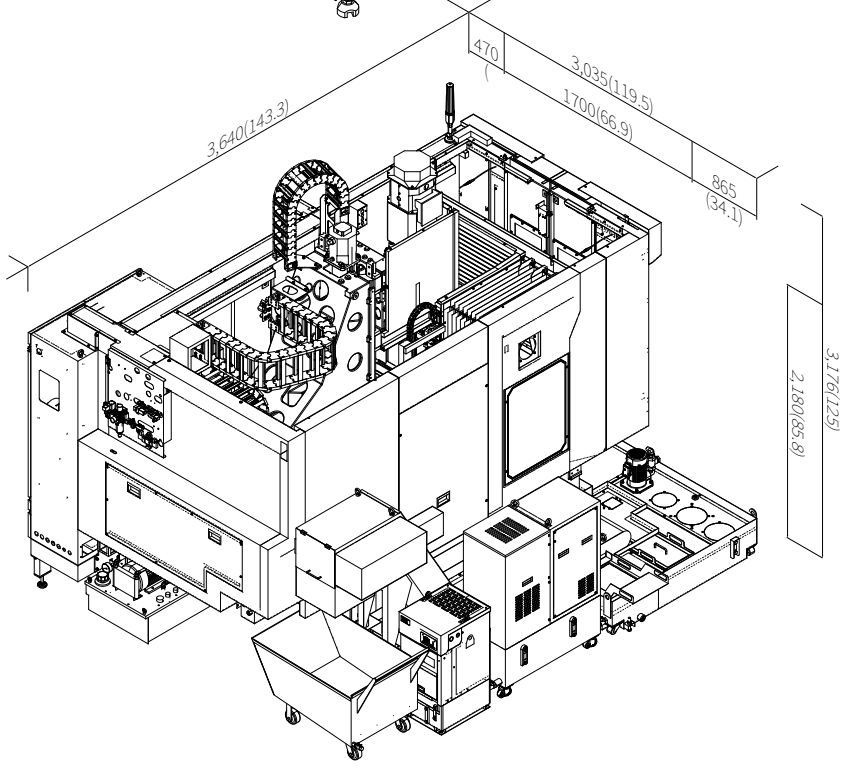

External Dimensions (KF5200D _ Standard)

unit : mm(in)

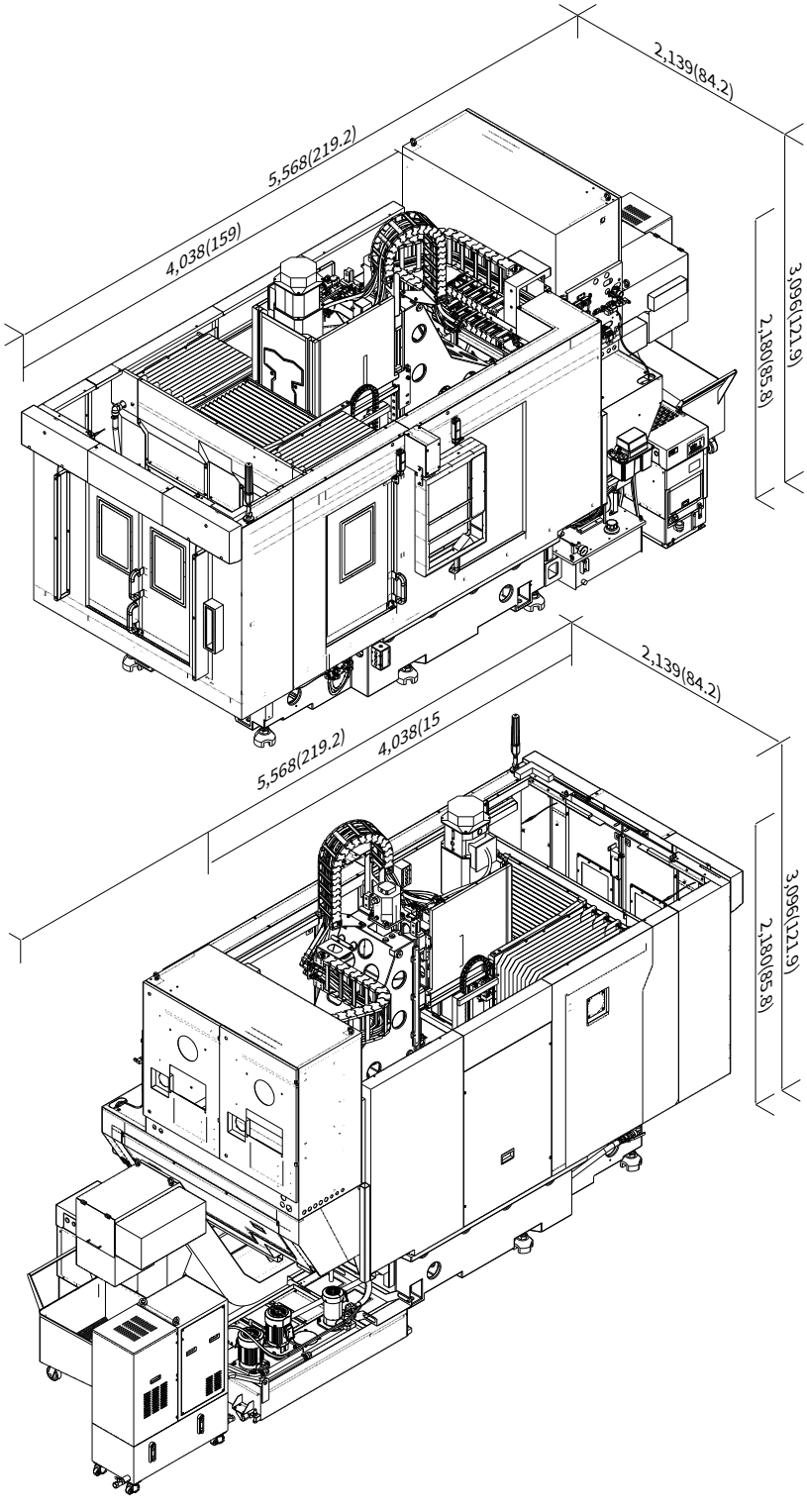

SPECIFICATIONS

External Dimensions (KF5200D _ Short Type)

unit : mm(in)

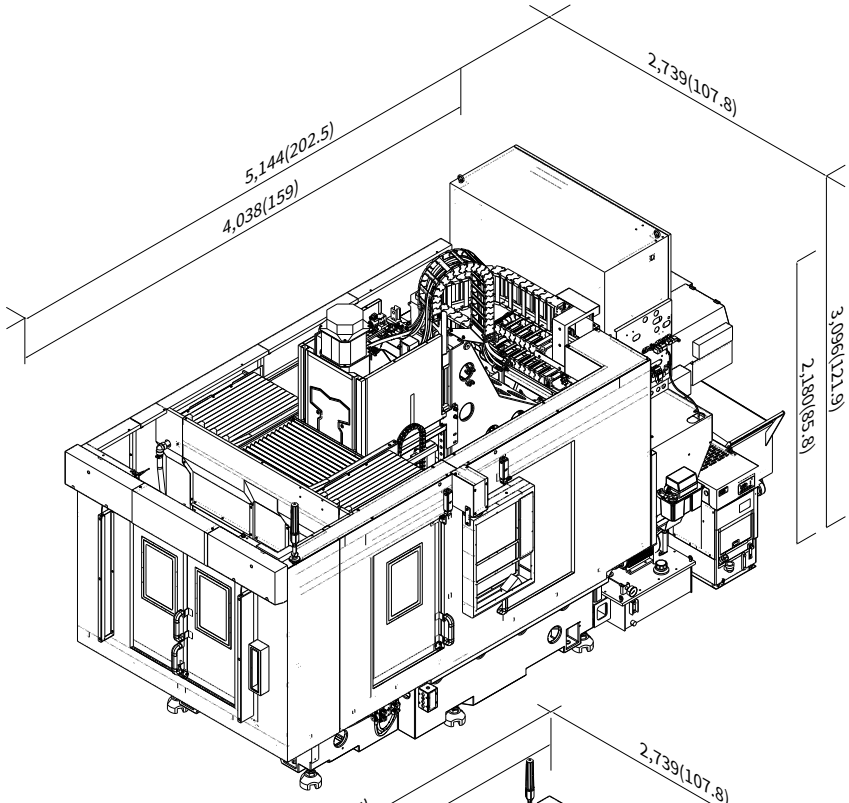

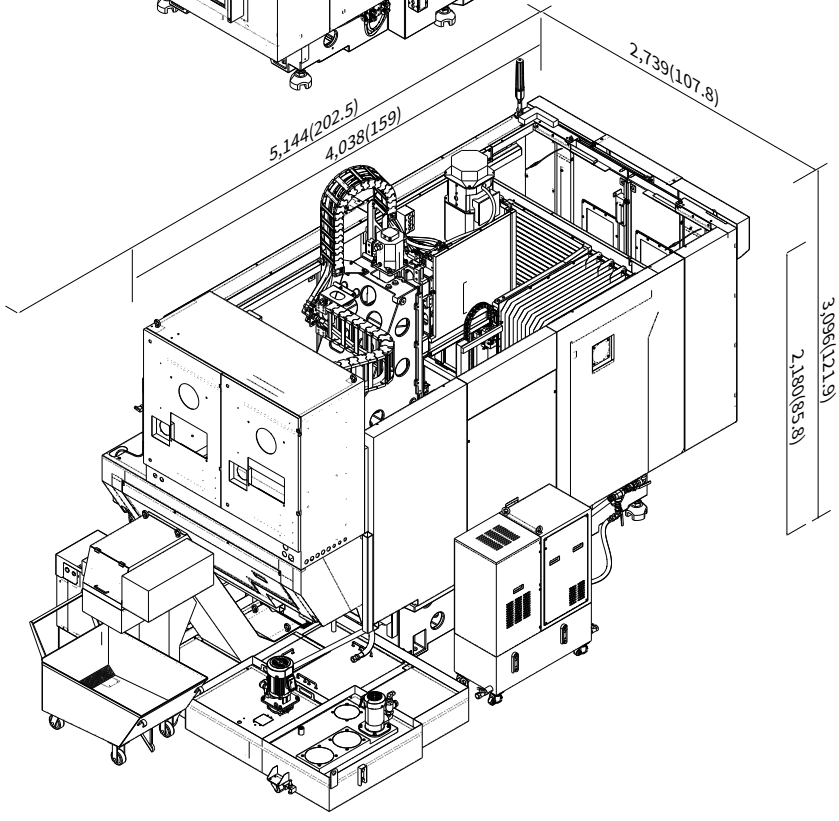

External Dimensions (KF5200D _ Side rear type)

unit : mm(in)

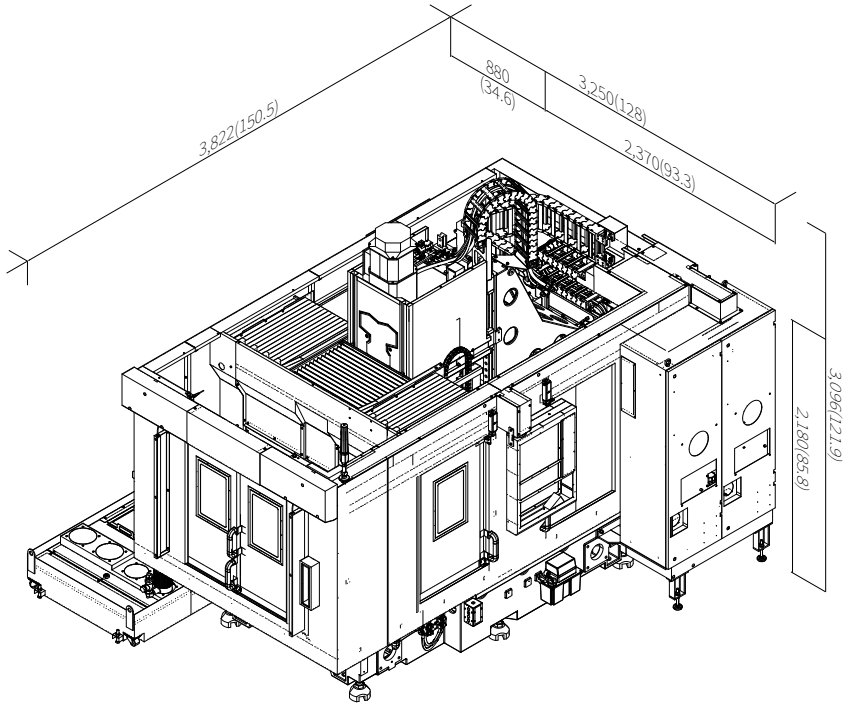

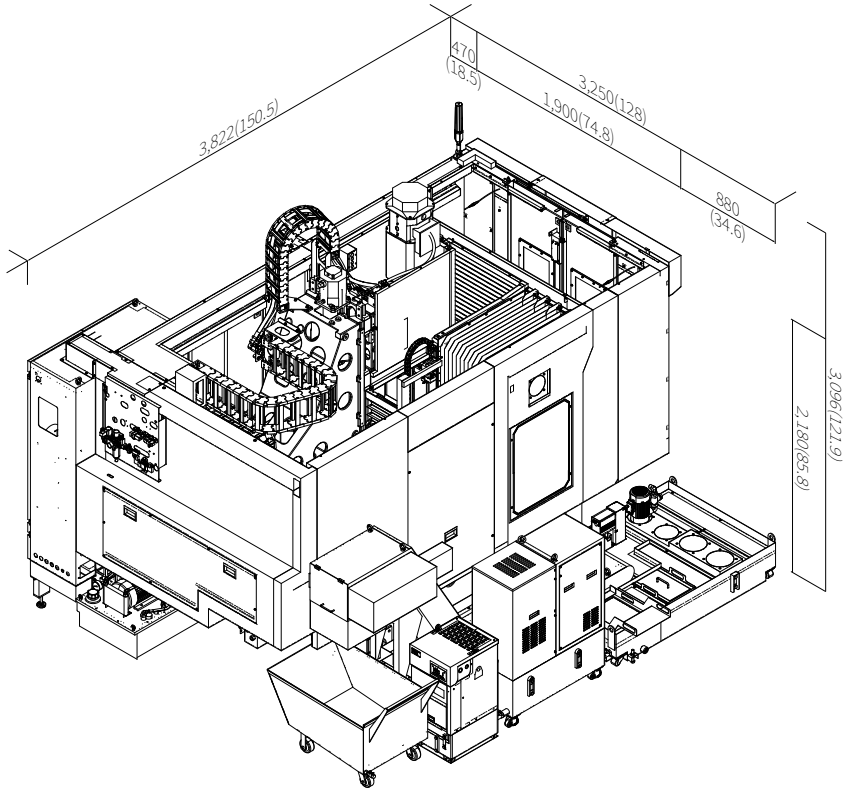

SPECIFICATIONS

External Dimensions (KF6000D _ Standard)

unit : mm(in)

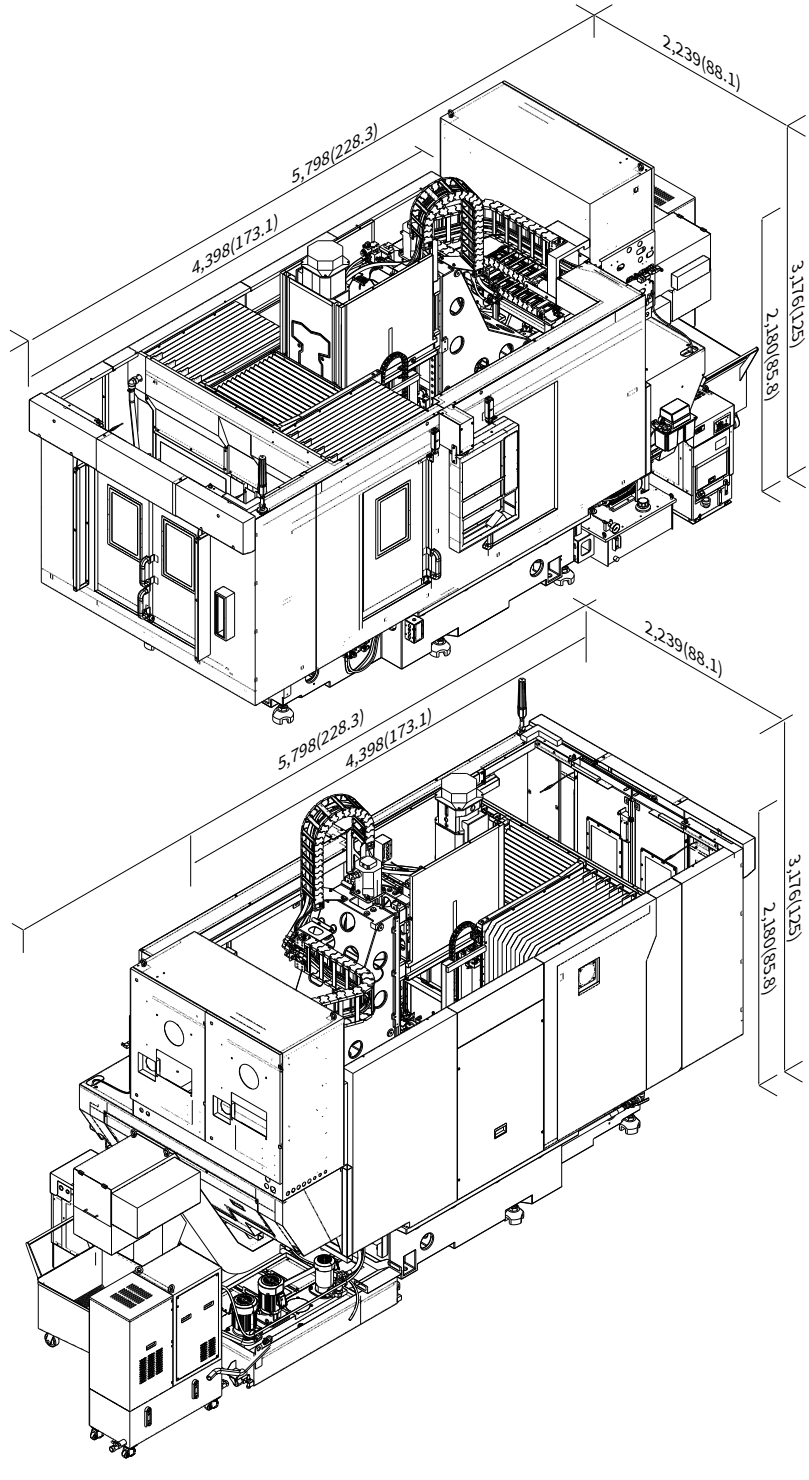

External Dimensions (KF6000D _ Short Type)

unit : mm(in)

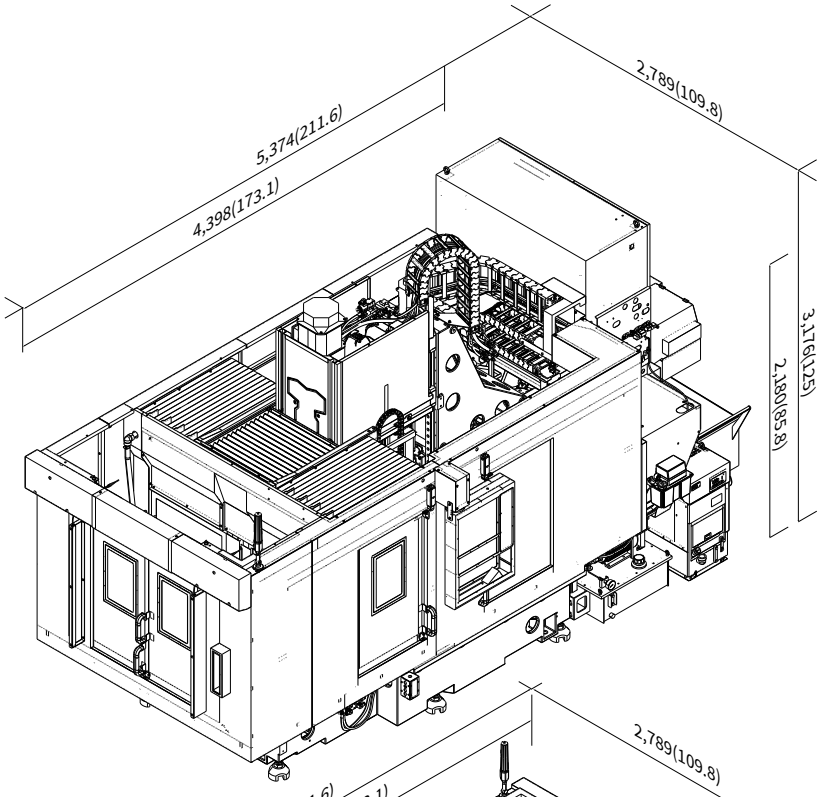

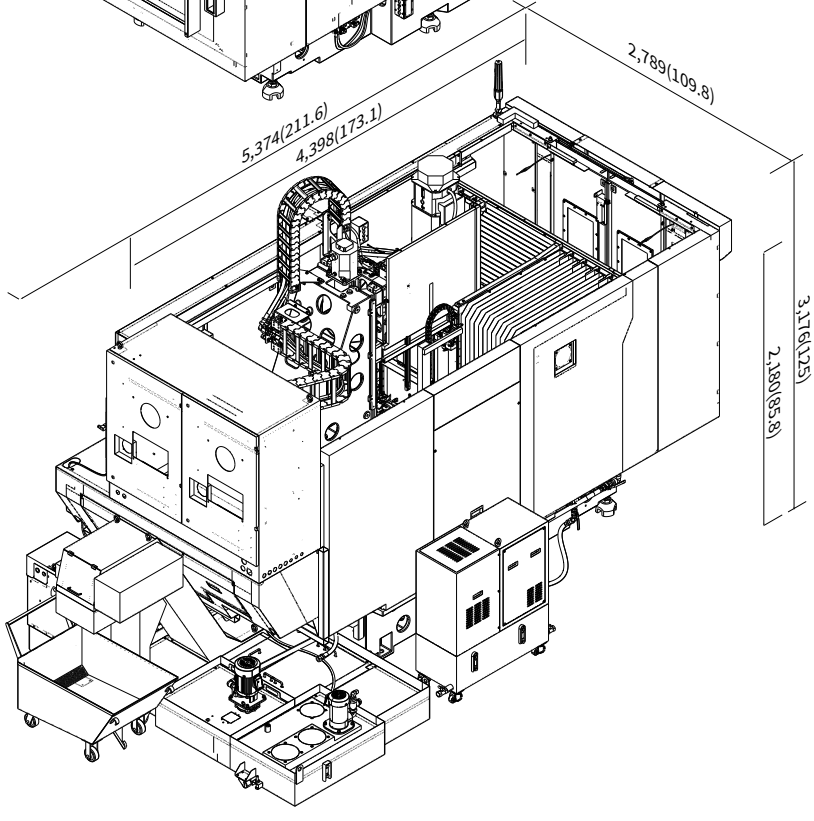

SPECIFICATIONS

External Dimensions (KF6000D _ Side rear type)

unit : mm(in)

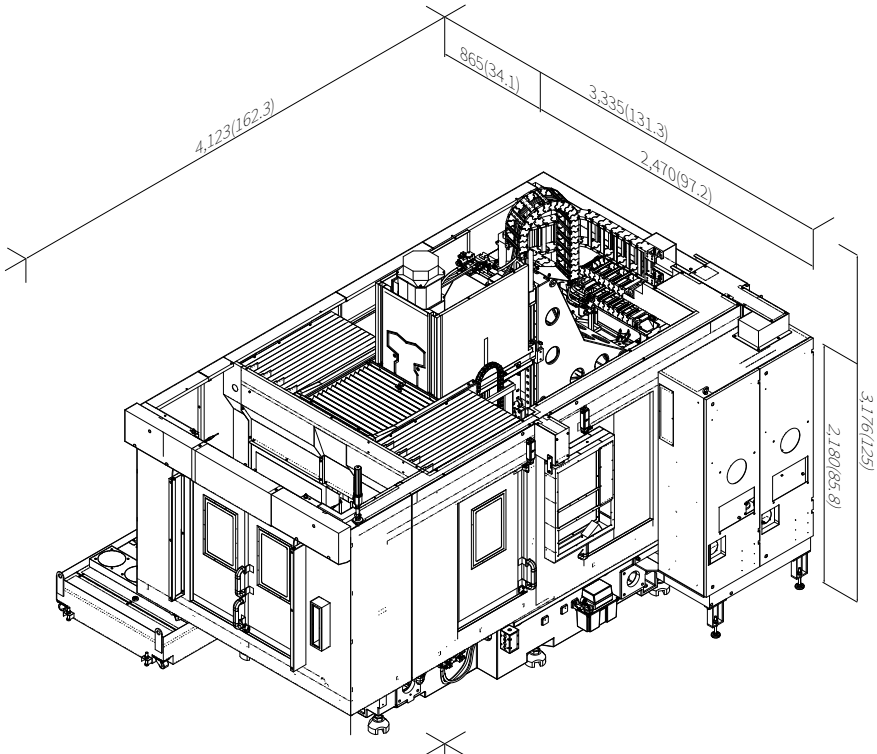

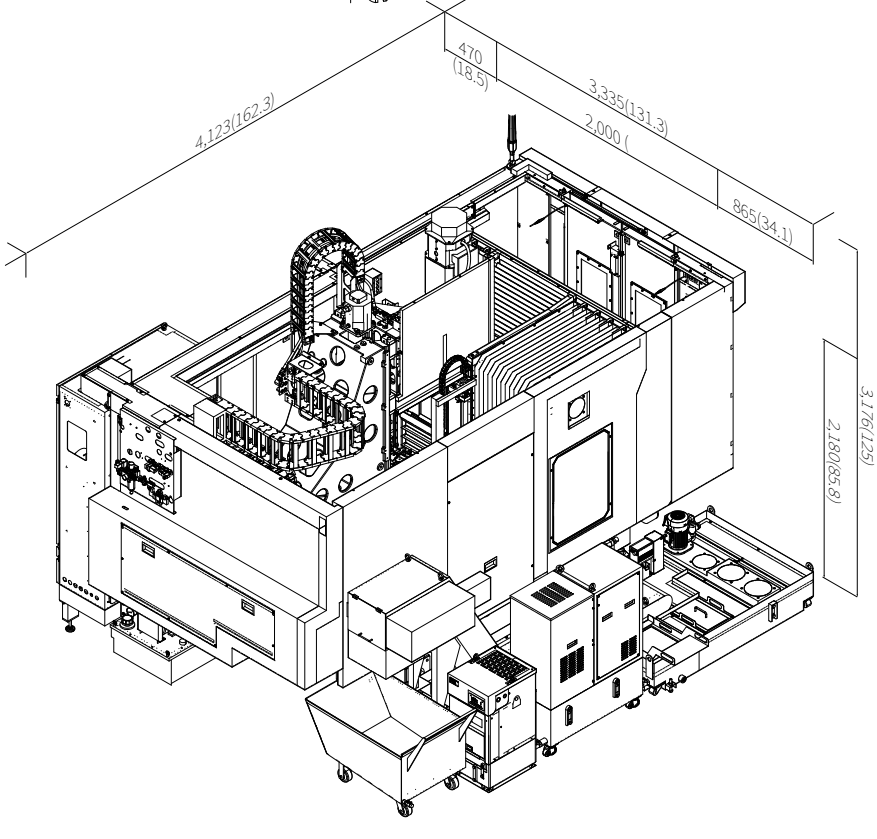

Table Dimensions

unit : mm

KF4300D

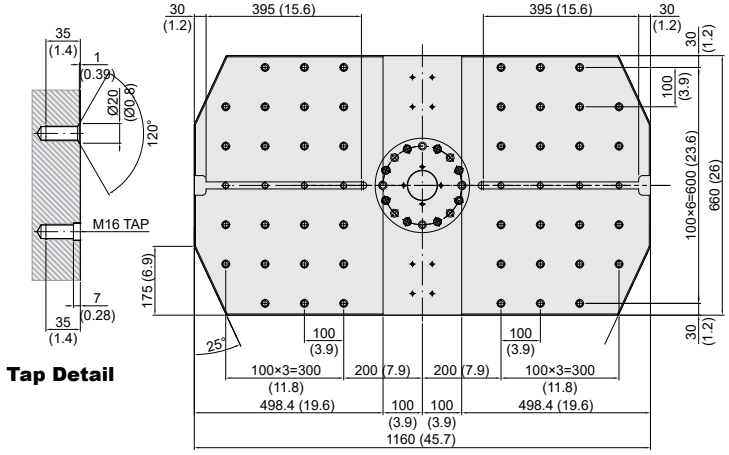

KF5200D

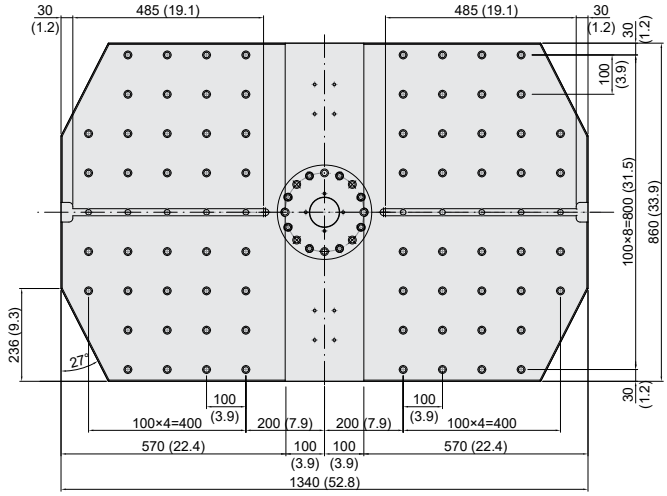

KF6000D

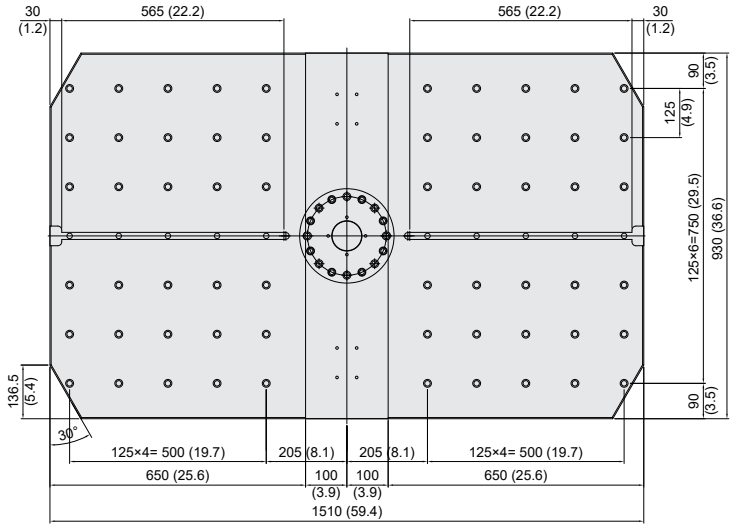

SPECIFICATIONS

Work Size

unit : mm(in)

KF4300D

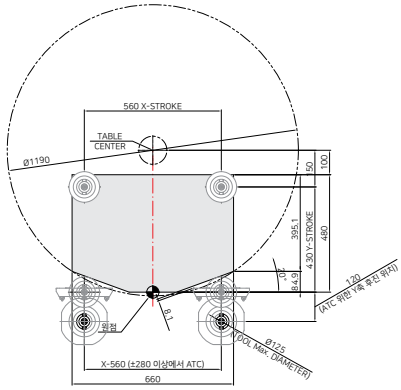

TOP VIEW

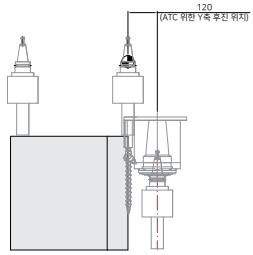

LEFT VIEW

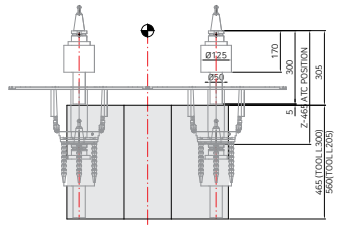

FRONT VIEW

KF5200D

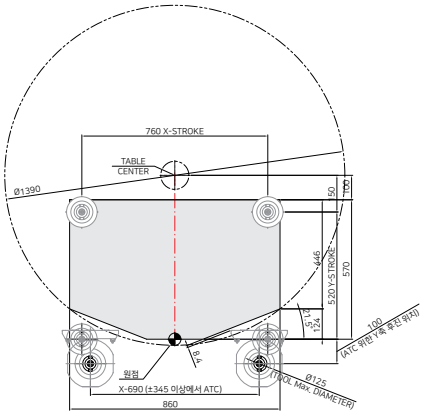

TOP VIEW

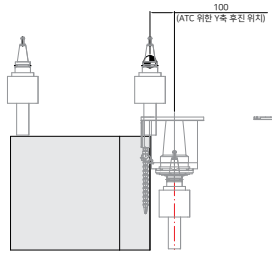

LEFT VIEW

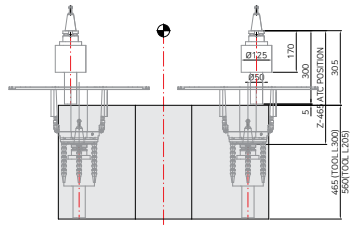

FRONT VIEW

KF6000D

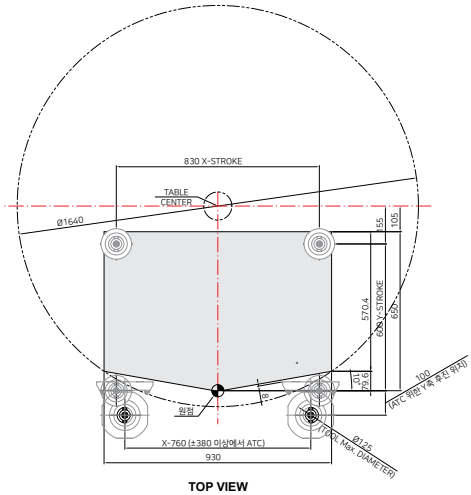

TOP VIEW

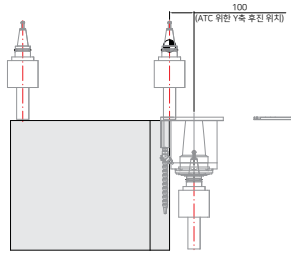

LEFT VIEW

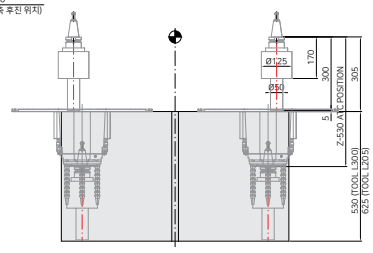

FRONT VIEW

SPECIFICATIONS

Tool Dimensions

unit : mm

BBT40

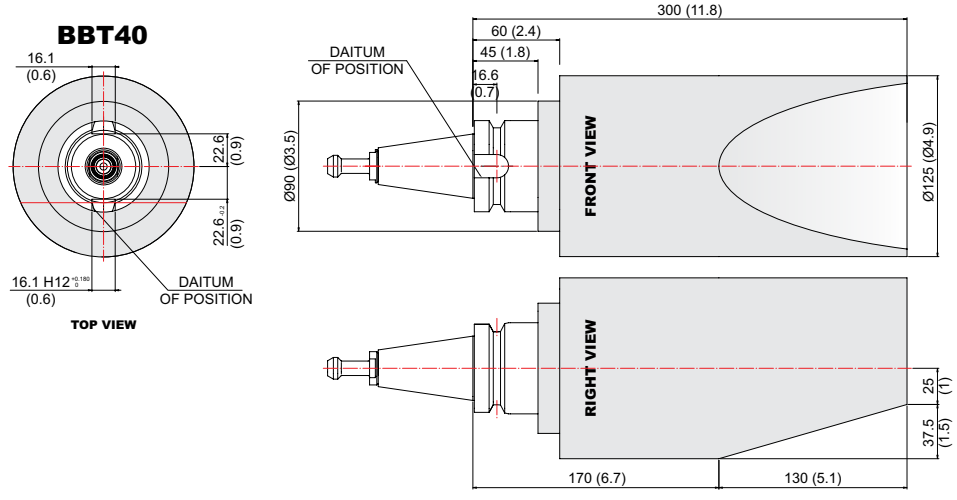

HSK-A63

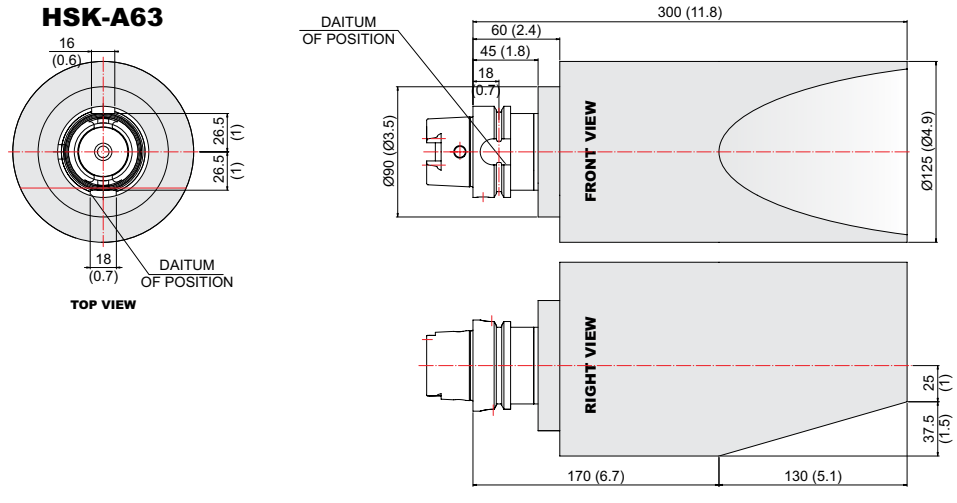

CAT40

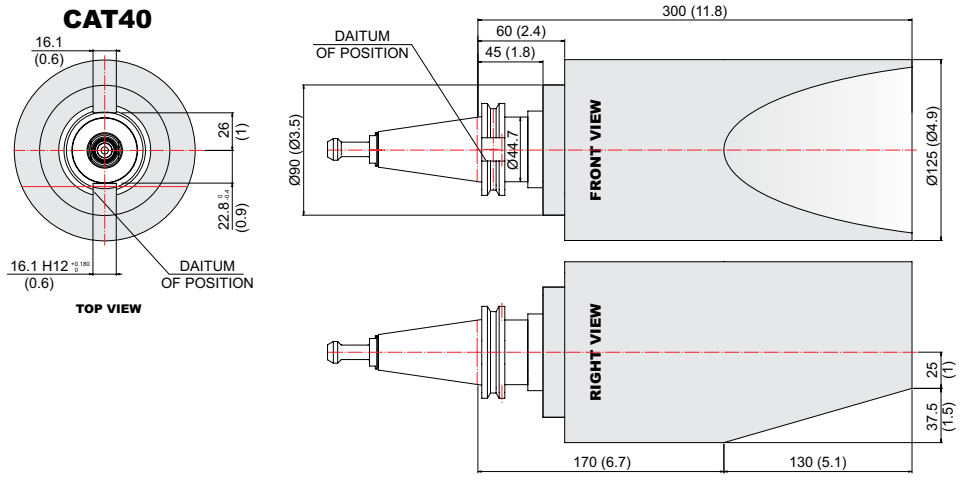

※ Please note that the tool length varies depending on the tool diameter.

SPECIFICATIONS

Tool Shank

unit : mm(in)

BT40/BBT40, BIG PLUS

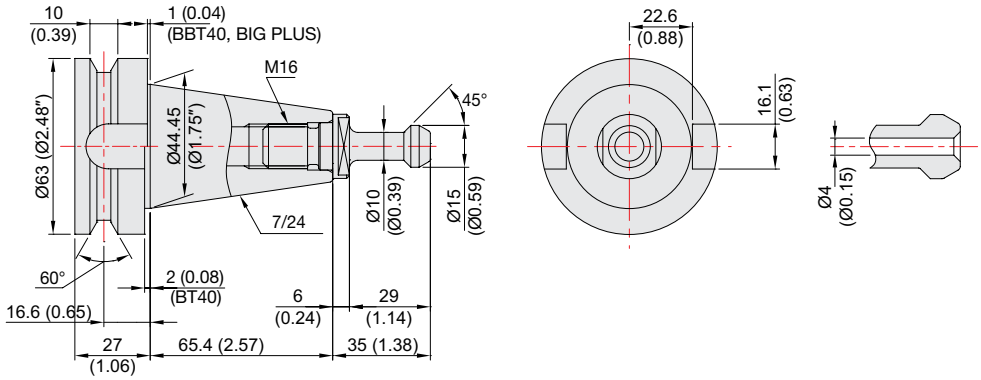

HSK A-63

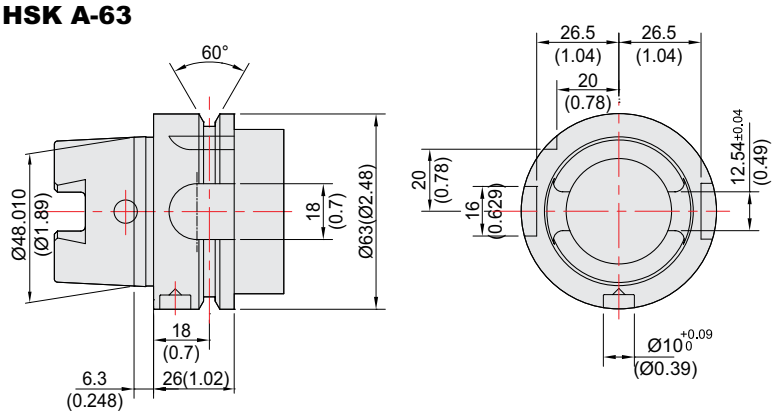

CAT40/BCV40

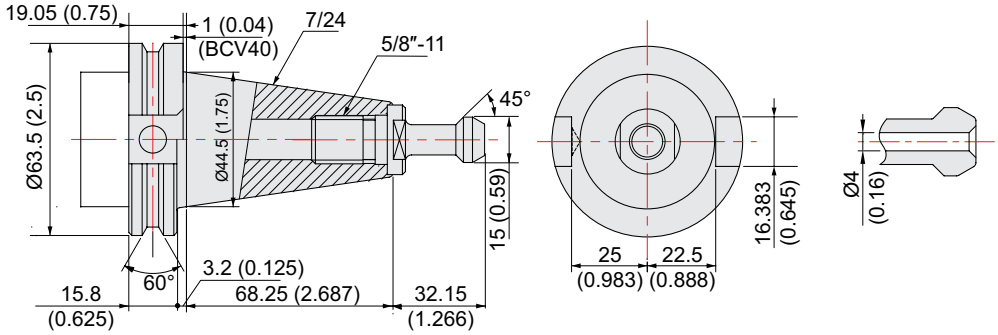

SPECIFICATIONS

Specifications

[ ] : Option

ITEM				KF4300D	KF5200D	KF6000D
TABLE	Table Size		mm(in)	2-660×480 (26″×18.9″)	2-860×570 (33.9″×22.4″)	2-930×650 (36.6″×25.6″)
	Maximum Load Capacity		kg(lb)	2-300 (661)	2-350 (772)	2-500 (1,102)
	Table Change Time		sec	5	5.5	8.3
	Change Method		-	Rotary Turn		
	Table Driving Method		-	Rotating Cylinder		
FEED	Travel	X/Y/Z	mm	560/430/570 (22.1″/20.5″/22.4″)	760/520/570 (29.5″/20.5″/22.4″)	830/600/635 (32.7″/23.6″/25″)
	Rapid Traverse Rate	X/Y/Z	m/min(ipm)	42/42/42 (1,654/1,654/1,654)		
	Slide Type		-	Roller Guide		
ATC	Tool Shank		-	BBT40 [HSK-A63]		
	Number of Tools		EA	42 : Pick-up Type		45 : Pick-up Type
	Max. Tool Dia. (W.T / W.O)		mm(in)	Ø80/Ø125 (Ø3.1″/Ø4.9″)		
	Max. Tool Length		mm(in)	Ø50 : 300 (11.8″) / Ø125 : 170 (6.7″)		
	Max. Tool Weight		kg(lb)	BBT40 : 8 (17.6) [HSK-A63 : 5 (11)]		
	Tool Selection Method		-	Fixed		
	Tool Change Time	C-C	sec	4.6	4.7	4.8
TANK CAPACITY	Coolant Tank		ℓ (gal)	415 (109.6)		
	Lubricating Tank		ℓ (gal)	4 (1.1)		
	Air Consumption (0.5MPa)		ℓ /min	470		
POWER SUPPLY	Electric Power Supply		KVA	34		
	Thickness of Power Cable		mm^2	Over 35		
	Voltage		V/Hz	220/60 (200/50)		
MACHINE	Floor Space (L×W)		mm(in)	1,700×3,858 (66.9″×151.9″)	1,900×4,038 (74.8″×160″)	2,000×4,398 (78.7″×173.1″)
	Height		mm(in)	3,096 (121.9″)		3,176 (125″)
	Weight		kg(lb)	7,000 (15,432)	8,400 (18,519)	9,100 (20,062)
NC	Controller		-	FANUC i Series - Smart Plus [FANUC 31i-B Plus]		

Spindle

[ ] : Option

Speed r/min	**Power** (Max./Cont.) kW (HP)	**Torque** (Max./Cont.) N·m (lbf·ft)	**Driving Method**	**Spindle Taper**
8,000	18.5/15 (25/20)	118/95.5 (87/70.4)	DIRECT	BBT40 [HSK-A63]
[8,000 : High-torque]	[15/11 (20/15)]	[286/143 (210.9/105.5)]		
[12,000]	[18.5/11 (25/15)]	[118/52.5 (87/38.7)]		
[15,000]	[18.5/11 (25/15)]	[118/52.5 (87/38.7)]		

Specifications are subject to change without notice for improvement.

CONTROLLER

FANUC i Series - Smart Plus

[ ] : Option ☆ Needed technical consultation

Controlled axis / Display / Accuracy Compensation	
Control axis	3 axis (X, Y, Z)
	[4 axis (X, Y, Z, A)] [5 axis (X, Y, Z, A, C)]
Simultaneously controlled axis	3 axis [Max. 4 axis]
Least setting Unit	X, Y, Z axis : 0.001 mm (0.0001 inch)
	B axis : 1 deg [0.001] deg
Least input increment	X, Y, Z axis : 0.001 mm (0.0001 inch)
	B axis : 1 deg [0.001] deg
Inch / Metric conversion	
High response vector control	
Interlock	All axis / Each axis
Machine lock	All axis
Backlash compensation	± 0 ~ 9999 pulses (Rapid traverse / Cutting feed)
Position switch	
LCD / MDI	15 inch LCD unit (with Touch Panel)
Feedback	Absolute motor feedback
Stored stroke check 1	Over travel
Stored stroke check 2, 3	
Stored pitch error compensation	
Operation	
Automatic operation (Memory)	
MDI operation	
DNC operation	Needed DNC software / CF card
Program restart	
Wrong operation prevention	
Program check function	Dry run, Program check, Z axe Machine lock
	Stored limit check before move
Single block	
Search function	Program Number / Sequence Number
Handle interruption	
Interpolation functions	
Nano interpolation	
Positioning	G00
Linear interpolation	G01
Circular interpolation	G02, G03
Exact stop mode	Single : G09, Continuous : G61
Dwell	G04, 0 ~ 9999.9999 sec
Skip	G31
Reference position return	1st reference, G28 / 2nd reference, G30
	Ref. position check, G27
Single direction positioning	G60
Thread synchronous cutting	G33
Helical interpolation	Circular + Linear 2 axis (Max.)
Feed function / Acc. & Dec. control	
Manual feed	Rapid traverse
	Jog : 0~2,000mm/min (79 ipm)
	Manual handle : x1, x10, x100 pulses
	Reference position return
Cutting Feed command	Direct input F code
Feedrate override	0 ~ 200% (10% Unit)
Rapid traverse override	1%, 25%, 50%, 100%
Override cancel	
Feed per minute	G94
Feed per revolution	G95
Cylindrical interpolation	G07.1
Inverse time feed	G93
Look-ahead block	200 blocks (AI APC)
Program input	
Tape Code	EIA / ISO
Optional block skip	9 ea
Absolute / Incremental program	G90 / G91
Program stop / end	M00, M01 / M02, M30
Maximum command unit	± 999,999.999 mm (± 99,999.9999 inch)
Plane selection	X-Y, G17 / Z-X, G18 / Y-Z, G19
Workpiece coordinate system	G52, G53, 48 pairs (G54.1 P1 ~ 48)
Manual absolute	Fixed ON
Programmable data input	G10
Sub program call	10 folds nested
Custom macro	#100 ~ #199, #500 ~ #999
Programmable mirror image	G51.1, G50.1
G code preventing buffering	G4.1
Optional chamfering corner R	

Program input	
Polar coordinate command	G15, G16
Canned cycle	G73, G74, G76, G80 ~ G89
Scaling	G50, G51
Coordinate system rotation	G68, G69
Conversational Program	Smart Guide-i
Auxiliary function / Spindle speed function	
Level-up M Code	Multi / Bypass M code
Spindle speed function	S & 5 digit , Binary output
Spindle override	0% ~ 150% (10% Unit)
Spindle orientation	M19
Retraction for rigid tapping	
FSSB high speed rigid tapping	
Tool function / Tool compensation	
Tool function	Max. T8 digit
Tool life management	
Tool offset pairs	400 pairs
Tool nose / radius compensation	G40, G41, G42
Tool length offset	G43, G44, G49
Tool offset memory C	Tool geometry and wear
	(Cutter and tool length)
Tool length measurement	Z axe Input C
Editing function	
Part program storage size	5,120m (2MB)
No. of registerable programs	1,000 ea
Program protect	
Background editing	
Extended part program editing	Copy, move and change of NC program
Memory card program edit	
Data input / output & Interface	
I/O interface	CF card, USB memory
	Embedded Ethernet interface
Screen hard copy	
External message	
External key input	
External workpiece number search	
Automatic data backup	
Setting, display and diagnosis	
Self-diagnosis function	
History display & Operation	Alarm & Operator message & Operation
Run hour / Parts count display	
Maintenance information	
Actual cutting feedrate display	
Display of spindle speed / T code	
Graphic display	
Operating monitor screen	Spindle / Servo load etc.
Power consumption monitoring	Spindle & Servo
Spindle / Servo setting screen	
Multi language display	Support 24 languages
Display language switching	Selection of 5 optional Languages
LCD Screen Saver	Screen saver

Option	
Fast ethernet	Needed option board
Data server	Needed option board
Protection of data at 8 levels	
Additional Axis	
Manual handle feed	2/3 units
Addition of custom macro	#98000 ~ #98499
Add. Workpiece	Max. 300 pairs (G54.1 P1 ~ P300)
AICC II	400 blocks ☆

Figures in inch are converted from metric values.
The FANUC controller specifications are subject to change based on the policy of company CNC supplying.

CONTROLLER

FANUC 31i-B Plus

[ ] : Option ☆ Needed technical consultation

Controlled axis / Display / Accuracy Compensation	
Control axis	3 axis (X, Y, Z)
	[4 axis (X, Y, Z, A)]
Simultaneously controlled axis	3 axis [Max. 4 axis]
Least setting Unit	X, Y, Z axis : 0.001 mm (0.0001 inch)
	B axis : 1 deg [0.001] deg
Least input increment	X, Y, Z axis : 0.001 mm (0.0001 inch)
	B axis : 1 deg [0.001] deg
Inch / Metric conversion	G20 / G21
High response vector control	
Interlock	All axis / Each axis
Machine lock	All axis
Backlash compensation	± 0 ~ 9999 pulses (Rapid traverse / Cutting feed)
Position switch	
LCD / MDI	15″ color LCD with Touch screen
Feedback	Absolute motor feedback
Stored stroke check 1	Over travel
Stored stroke check 2, 3	
Pitch error compensation	
Operation	
Automatic operation (Memory)	
MDI operation	
DNC operation	Needed DNC software / CF card
Program restart	
Wrong operation prevention	
Program check function	Dry run, Program check
	Z axis Machine lock, Stroek check before move
Single block	
Search function	Program Number / Sequence Number
Retraction for rigid tapping	
Manual guide i	Smart Guide i
Interpolation functions	
Nano interpolation	
Positioning	G00
Linear interpolation	G01
Cylinderical interpolation	G02, G03
Exact stop mode	Single : G09, Continuous : G61
One-way positioning	G60
Inverse-time feed	G93
Dwell	G04, 0 ~ 9999.9999 sec
Skip	G31
Reference position return	1st reference : G28
	2, 3, 4 reference : G30 P2, P3, P4
	Ref. position check : 27
Thread synchronous cutting	G33
Helical interpolation	Circular + Linear interpolation 2 axis (max.)
Feed function / Acc. & Dec. control	
Manual feed	Rapid traverse
	Jog : 0~5,000mm/min (197 ipm)
	Manual handle : x1, x10, x100 pulses
	Reference position return
Cutting Feed command	Direct input F code
Feedrate override	0 ~ 200% (10% Unit)
Rapid traverse override	F0% (F1%), F25%, F50%, F100%
Override cancel	
Feed per minute	G94
Feed per revolution	G95
Look-ahead block	1,000 Block
Program input	
Tape Code	EIA / ISO
Optional block skip	9 ea
Absolute / Incremental program	G90 / G91
Program stop / end	M00, M01 / M02, M30
Maximum command unit	± 999,999.999 mm (± 99,999.9999 inch)
Plane selection	X-Y : G17 / Z-X : G18 / Y-Z : G19
Workpiece coordinate system	G52, G53, 48 pairs (G54.1 P1 ~ P48)
Manual absolute	Fixed ON
Programmable data input	G10
Sub program call	10 folds nested
Custom macro	#100~#199, #500~#599, #98000~#98499
Programmable mirror image	G51.1, G50.1

Controlled axis / Display / Accuracy Compensation	
Polar coordinate command	G15, G16
Do not look ahead function	G4.1
Including Chamfering / Corner R	
Canned cycle	G73, G74, G76, G80 ~ G89
Coordinate rotation	G68, G69
Scaling	G50, G51
Auxiliary function / Spindle speed function	
Auxiliary function	M 4 digit
Level-up M Code	Multi / By-Pass
Spindle speed command	S 5 digit , Binary output
Spindle override	50% ~ 120% (10% Unit)
Spindle orientation	M19
FSSB high speed rigid tapping	
Tool function / Tool compensation	
Tool function	Max. T 8 digit
Tool life management	256 pairs ☆
Tool offset pairs	400 pairs
Tool nose radius compensation	G40, G41, G42
Tool nose length compensation	G43, G44, G49
Tool offset memory C	Tool length, diameter, abrasion (length, diameter)
Tool length measurement	Z axis Input C
Editing function	
Part program storage size	10240m (4MB)
No. of registerable programs	1,000 ea
Program protect	
Background editing	
Extended part program editing	
Memory card program edit	Copy, move and change of NC program
Protection of data at 8 levels	
Data input / output & Interface	
I/O interface	Memory card, USB memory interface
	Embedded Ethernet interface
Screen hard copy	
External message	
External key input	
External workpiece number search	
Automatic data backup	
Setting, display and diagnosis	
Self-diagnosis function	
History display	Alarm & Operator message & Operation
Run hour / Parts count display	
Maintenance information	
Actual cutting feedrate display	
Display of spindle speed / T code	
Graphic display	
Operating monitor screen	
Power consumption monitoring	Spindle & Servo
Multi language display	Support 25 languages
Display language switching	Selection of 5 optional Languages
LCD Screen Saver	Screen saver
Macro Excutor	Custom software 8MB (WIA Screen)☆
Processing select	Speed/ridigity setting

Option	
Fast ethernet	Needed option board
Data server	Needed option board (1GB, 2G, 4GB)
Sub Spindle control	☆
Polar coordinate interpolation	G12.1, G13.1
Cylinderical interpolation	G07.1
Manual handle feed	2/3 units
Tool management function	
Tool offset number	Max. 2,000 pair
Program storage capacity	~ 8 MByte
Program registration number	Max. 4,000 ea
Additional work coordinate	300 pair (G54.1 P1 ~ P300)

Figures in inch are converted from metric values.
The FANUC controller specifications are subject to change based on the policy of company CNC supplying.

WIA MACHINE TOOLS

home page facebook youtube instagram linkedin

Headquarter / R&D Center 106, Yongji-ro, Seongsan-gu, Changwon-si, Gyeongsangnam-do, Republic of Korea **TEL** : +82 55 225 9999

Overseas Sales Team 13, Iljik-ro 12beon-gil, Gwangmyeong-si, Gyeonggi-do, Republic of Korea **TEL** : +82 055 225 9645

OVERSEAS OFFICES

America corp. 450 Commerce Blvd, Carlstadt, NJ 07072, USA **TEL** : +1-201-987-7298

Europe GmbH Alexander-Fleming-Ring 57, 65428 Russelsheim Germany **TEL** : +49-0-6142-9256-0

China corp. Company No.16 Fenghuang Road, Fenghuang Town, Zhangjiagang City, Jiangsu Province, China **TEL** : +86-512-5637-9719

CIS Branch Office 050051, Kazakhstan, Almaty, Elebekova street 10, B.3 Office no. 103 **TEL** : +7-727-355-7133

India Pvt. Ltd. #4/169, 1st Floor, LOTTE BLDG, Rajiv Gandhi Salai, (OMR), Kandanchavadi, Chennai - 600096, Tamilnadu, India **TEL** : +91-76-0490-3348

2026-09 002.020 ENG